MYA 5.5Y Microbalance, MYA 2.5Y Microbalance, MYA 21.5Y Microbalance

MYA 5.5Y Microbalance
MYA 2.5Y Microbalance
MYA 21.5Y Microbalance

The drawings, photos and graphics used are for illustrative purposes only.

Functions

- Autotest
- Dosing
- Percent Weighing
- Parts counting
- Peak hold
- Formulation
- Newton unit measurement
- Statistics
- Checkweighing
- IR sensors
- GLP Procedures
- Animal weighing
- Pipettes Calibration
- Air density correction
- Density determination
- Differential weighing
- Ambient conditions monitoring
- Statistical Quality Control
- Packaged Goods Control
- ALIBI Memory
- Wi-Fi

Australian Sales & Service Distributor
HEAD OFFICE
Phone: 1300 885 746
Located: 5C Murray Dwyer Cct, Mayfield West NSW 2304
Email: admin@nws.com.au
Web: www.nuweigh.com.au
ESTABLISHED. 1976

Datasheet

	MYA 2.5Y Microbalance	MYA 5.5Y Microbalance	MYA 21.5Y Microbalance
Metrological parameters			
Maximum capacity [Max]	2,1 g	5,1 g	21 g
Minimum load	0,1 mg	0,1 mg	0,1 mg
Readability [d]	1 µg	1 µg	1 µg
Verification scale interval [e]	1 mg	1 mg	1 mg
Tare range	-2,1 g	-5,1 g	-21 g
Standard repeatability [5% Max]	0,41 µg	0,6 µg	1 µg
Standard repeatability [Max]	1 µg	1,6 µg	3 µg
Standard minimum weight (USP)	0,82 mg	1,2 mg	2 mg
Standard minimum weight (U=1%, k=2)	0,082 mg	0,12 mg	0,2 mg
Permissible repeatability [5% Max]	0,8 µg	1,2 µg	1,6 µg
Permissible repeatability [Max]	1,5 µg	2,4 µg	4 µg
Linearity	±3 µg	±5 µg	±7 µg
Eccentric load deviation	3 µg	5 µg	7 µg
Sensitivity time drift	1×10^{-6}/Year×Rt	1×10^{-6}/Year×Rt	1×10^{-6}/Year×Rt
Stabilization time	max 8 s	max 8 s	max 10 s
Adjustment	internal (automatic)	internal (automatic)	internal (automatic)
OIML Class	I	I	I
Physical parameters			
Leveling system	automatic - Reflex Level System	automatic - Reflex Level System	automatic - Reflex Level System
Display	10" touchscreen	10" touchscreen	10" touchscreen
Delivery components	Microbalance, terminal, weighing pan, weighing pan shield, glass lid, power supply, pincette, brush, fabric dust cover.	Microbalance, terminal, weighing pan, weighing pan shield, glass lid, power supply, pincette, brush, fabric dust cover.	Microbalance, terminal, weighing pan, weighing pan shield, glass lid, power supply, pincette, brush, fabric dust cover.
Weighing chamber dimensions	ø90×90 mm	ø90×90 mm	ø90×90 mm
Weighing pan dimensions	ø16 mm	ø26 mm	ø26 mm
Packaging dimensions	492×595×750 mm	492×595×750 mm	492×595×750 mm
Net weight	9,1 kg	9,1 kg	9,1 kg
Gross weight	17 kg	16 kg	16 kg
Communication interface			
Communication interface	USB-A ×2, USB-C, HDMI, Ethernet, Wi-Fi, Hotspot	USB-A ×2, USB-C, HDMI, Ethernet, Wi-Fi, Hotspot	USB-A ×2, USB-C, HDMI, Ethernet, Wi-Fi, Hotspot
Electrical parameters			
Power supply	Adapter: 100 – 240V AC 50/60Hz 1A; 15V DC 2,4A Balance: 12 – 15V DC 1,4A max*	Adapter: 100 – 240V AC 50/60Hz 1A; 15V DC 2,4A Balance: 12 – 15V DC 1,4A max*	Adapter: 100 – 240V AC 50/60Hz 1A; 15V DC 2,4A Balance: 12 – 15V DC 1,4A max*
Environmental conditions			
Operating temperature	+10 — +40 °C	+10 — +40 °C	+10 — +40 °C
Operating temperature change rate	±0,3°C/1h (±1°C/8h)	±0,3°C/1h (±1°C/8h)	±0,3°C/1h (±1°C/8h)
Relative humidity	40% — 80%	40% — 80%	40% — 80%
Relative humidity change rate	±1%/h (±4%/8h)	±1%/h (±4%/8h)	±1%/h (±4%/8h)

* The power supply can be connected to the socket on the back of the balance housing or to the terminal.

* Wi-Fi® is a registered trademark of Wi-Fi® Alliance.

Accessories

Antivibration Tables
Adapter for Pipette Calibration
Barcode scanners
Professional weighing table
Protective cover for balances
USB Hubs
THBR 2.0 System - Ambient Conditions Monitoring
Weighing dishes
Receipt Printer
Fingerprint Reader
RS 232 – USB Converter
RS 232, RS 485 cables

Software

RAD-KEY
LabVIEW Driver
RADWAG Remote Desktop
Scales Editor 2.1
R.Barcode
Audit Trail Reader
Label Editor R02
R-LAB
RADWAG Development Studio

Device dimensions

MYA 5.5Y Microbalance, MYA 2.5Y Microbalance, MYA 21.5Y Microbalance

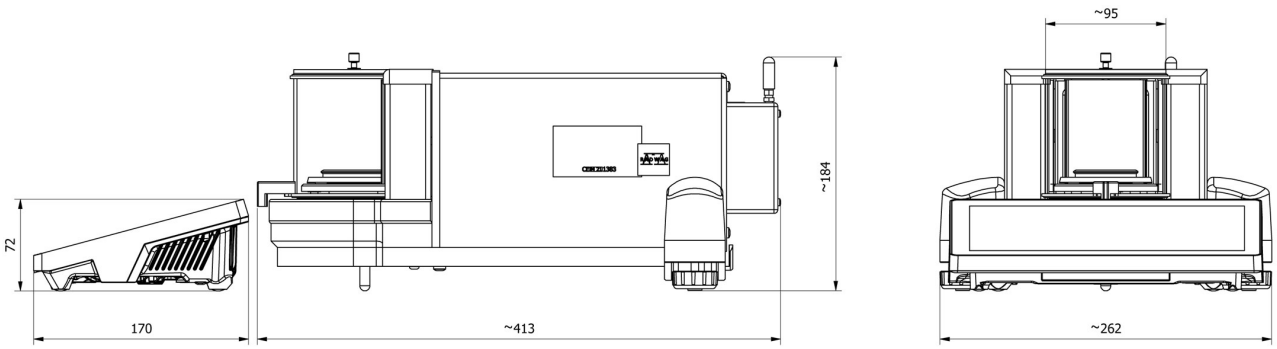

Australian Sales & Service Distributor
HEAD OFFICE
Phone: 1300 885 746
Located: 5C Murray Dwyer Cct, Mayfield West NSW 2304
Email: admin@nws.com.au
Web: www.nuweigh.com.au
ESTABLISHED. 1976